Making a Difference for California

University of California
Agriculture and Natural Resources

UC PEER REVIEWED

http://anrcatalog.ucdavis.edu

Publication 8393 | May 2010

Home Survival in Wildfire-Prone Areas: Building Materials and Design Considerations

STEPHEN L. QUARLES, UCCE Natural Resources Advisor, Contra Costa County; **YANA VALACHOVIC,** UCCE Forest Advisor, Humboldt County; **GARY M. NAKAMURA,** UCCE Area Forestry Specialist, Shasta County; **GLENN A. NADER,** UCCE Natural Resources Advisor, Sutter-Yuba Counties; and **MICHAEL J. DE LASAUX,** Natural Resources Advisor, Plumas-Sierra County

Introduction

Embers are the most important cause of home ignition. Recent research indicates that two out of every three homes destroyed during the 2007 Witch Creek fire in San Diego County were ignited either directly or indirectly by wind-dispersed, wildfire-generated, burning or glowing embers (Maranghides and Mell 2009) and not from the actual flames of the fire. These embers are capable of igniting and burning your home in several ways. In order to have a wildfire-safe home, two equally important factors must be implemented: 1) the wise selection of building materials and designs that will help the home resist the wildfire; and 2) the home must have adequate defensible space, based on the wise selection, placement, and maintenance of near-home vegetation.

There is a direct link between home survival, the vegetation management required in developing adequate defensible space around the home, and the building materials and design used to construct the home. The area where your vegetation should be managed (i.e., your defensible space) will depend on the particular topography and siting of the home on the property. Information included in this publication is focused on the home and is intended to provide information to help you make "fire wise" decisions regarding material choices and design decisions, whether you are building a new home or retrofitting your existing house. A considerable amount of information has been published in recent years on defensible space and vegetation management. Check with your local cooperative extension office or fire department for information appropriate to your area.

Ignition of Homes in Wildfire-Prone Areas

Wildfires spread by a combination of a moving fire front and airborne burning and glowing embers. Building loss during wildfires occurs as a result of some part of the building igniting from one or more of the three basic wildfire exposures, which include 1) embers (also called *firebrands*), 2) radiant heat, and 3) direct flame contact. Embers are light enough to be blown through the air, and can result in the rapid spread of wildfire by *spotting* (in which embers are blown ahead of the main fire, starting other fires). Should these embers land on or near your house, they could just as

easily ignite nearby vegetation or accumulated debris or enter the home or attic through openings or vents, igniting furnishing or combustible debris in those locations. Near-home ignitions will subject some portion of your house to either a direct flame contact exposure, where the flame can touch your home, or a radiant heat exposure (the heat you feel standing next to a campfire or fireplace). If the fire is close enough to a combustible material, or the radiant heat is high enough, an ignition will result. Even if the radiant exposure is not large enough or long enough to result in ignition, it can preheat surfaces and thus make them more vulnerable to ignition from a flame contact exposure. With any one of these exposures, if no one is available to extinguish the fire and adequate fuel is available, the initially small fire will grow into a large one.

One of the misconceptions about home loss during wildfires is that the loss occurs as the main body of the fire passes. Research and on-the-ground observation during wildfires have both shown that the main flame front moves through an area in a very short time: anywhere from 1 to 10 minutes, depending on the vegetation type (Butler et al. 2003; Ramsay and Rudolph 2003). Homes do not spontaneously ignite—they are lost as a result of the growth of initially small fires, either in or around the home or building.

The wildfires that are clearly remembered by the general public are those where hundreds of homes are lost. During these events, many homes are lost because the wildfire becomes an urban fire, where the home-to-home spread of fire becomes more significant than wildland-to-home spread of fire, especially with decreasing separation between homes (Cohen 2008; Institute for Business and Home Safety 2008). This publication will focus on wildland-to-home fire spread and discuss vulnerabilities of the components of the house, how they are vulnerable to wildfire, and material and design options to improve the ability of your home to survive.

Roof Covering and Roof Edge

Roof Covering

The roof covering and edge are the most vulnerable part of a home (fig. 1). Because of its large, relatively horizontal surface, the roof has the most severe exposure to all elements, including sun and rain, and during a wildfire, embers. Because of these exposures, roof coverings tend to require more maintenance and typically have a shorter service life than other construction materials used on the outside of homes.

Fire ratings for roofs provide a measure of the amount of protection. *Class A* provides the highest protection and *Class C* the lowest. At a minimum, unrated roofs, such as an untreated wood shake roof, should be replaced by a rated roof. *Class A* roofs are commonly available and can be very affordable, so they can be well worth the cost. Regardless of roof type, it should be kept in good condition and free of combustible debris. Your local building and fire departments would know about any special requirements that may apply to your community.

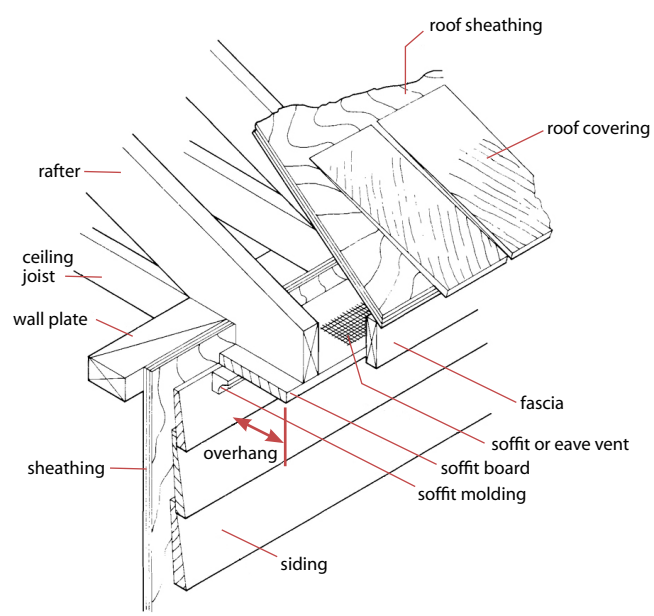

Figure 1. Diagram of the edge of a roof and the side of a house. A gutter is often attached to the fascia, at the roof edge. *Source:* Adapted from Sherwood and Stroh 1989.

Roofing materials can obtain a *Class A* rating based on the covering alone (a stand-alone *Class A* covering) or the covering and an underlying material used to enhance fire performance (*Class A* by assembly). The fire rating for roof coverings is determined by following a standard test procedure developed by the American Society for Testing and Materials (ASTM), called the Standard Test Method E-108. This test evaluates flame spread over the roof covering, the ease with which fire can penetrate through the roof (and into the attic or ceiling space), and the ember generation potential of the roof covering. If flame spread is too large, or if fire penetrates through the roof covering and underlying construction materials, the covering cannot be considered Class A. Shown in figures 2, 3, and 4 are a burning *Class A brand,* a *burn through* (i.e., failure), and a gypsum-fiberglass material used in a Class A roof assembly.

When using an assembly-rated Class A covering, make sure that all installation instructions are followed and all specified materials are used. The fire performance of the assembly may be reduced if installation procedures are modified or materials other than those specified are substituted.

Many noncombustible roofing materials receive a stand-alone Class A rating by meeting the *noncombustible* definition as provided in the building code; therefore, they do not need to be tested to the ASTM E-108 standard and given a fire-resistant rating (e.g., a Class A, Class B, or Class C fire-resistant rating). An exception to this general rule is an aluminum covering. Because of its low melting point, it must be tested. Installation instructions will include use of an additional material under the aluminum covering in order to receive the Class A (by assembly) rating. Wood

Figure 2. A burning *Class A brand* is positioned on a roof covering, constructed according to ASTM E-108. The Class A brand is a three-layer sandwich construction assembled using ¾-inch square sticks, each 12 inches long, made of Douglas fir. The brand is ignited prior to placement on the roof and it is used to produce a standard amount of heat to the roof. *Photo:* Stephen L. Quarles.

Figure 3. Demonstration of a flame-through (burn-through), passing from the roof covering to the underside of the roof deck. As constructed, this is not a Class A roof covering because it allowed flame penetration when subjected to a Class A burning brand. *Photo:* Stephen L. Quarles.

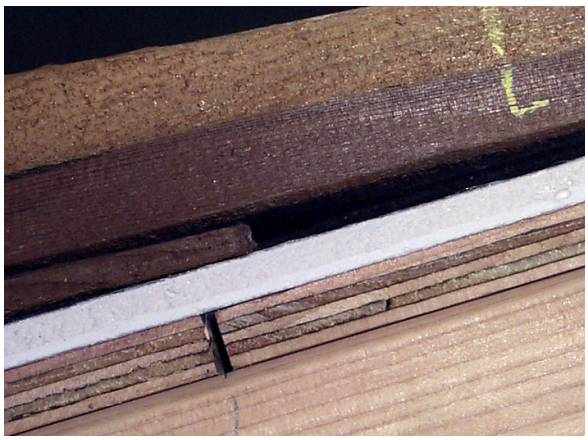

Figure 4. An assembly-rated Class A roof covering, consisting of exterior-rated, pressure-impregnated, fire-retardant treated shakes and an underlying fiberglass-reinforced panel (white in color). Note that the joints between the gypsum and wood sheathing panels are staggered. This minimizes the opportunity for fire to penetrate into the attic space.
Photo: Stephen L. Quarles.

Figure 5. Vegetative debris accumulated at this roof-to-wall intersection. Ignition of this debris would expose the adjacent siding to flames, as well as the underlying sheathing above this stand-alone Class A roof covering. Depending on the overall roof design, the Class A roof covering could give the homeowner a false sense of security. *Photo:* Stephen L. Quarles.

Figure 6. This vegetative (green) roof covering provides Class A protection in terms of fire penetration into the attic or living space, but ember ignition and subsequent flame spread and contact with the dormer and window shown in this photograph could result in the glass breaking and fire entering the building. *Photo:* Bernard Harrison.

shakes treated with a pressure-impregnated, fire-retardant chemical can achieve a Class A assembly rating. In California, wood shakes treated with a fire retardant must pass a natural weathering exposure test to be approved for use by the Office of the State Fire Marshal (OSFM). Wood shakes approved for use in California must be registered with the OSFM Building Materials Listing Program. In some communities within and outside of California, wood shakes and shingles treated with fire retardant are not allowed.

A complex roof provides an additional level of vulnerability. The term *complex* indicates that there are a number of horizontal-to-vertical intersections on the roof that could make a Class A roof more vulnerable to wildfire, and in particular to an ember exposure. From a fire performance perspective, these intersections provide collection points for windblown debris (e.g., pine needles and other vegetation), debris from overhanging trees, and—during a wildfire—windblown embers. These locations are also where different construction materials with different fire vulnerabilities will be present on the respective surfaces. If ignited, the flames from the burning vegetative debris would provide a flame contact exposure on the siding material, the roof sheathing or soffit material, or even a window. The vulnerability of these components will depend on material selection and other design considerations. Particularly with a Class A roof, it will be the fire resistance of the siding, sheathing, or window that will determine the vulnerability of the complex roof, not the roof covering itself. Examples of two complex roof features that can increase the vulnerability of a complex roof are given in figures 5 and 6.

Skylights

Skylights typically cover a small portion of the roof, but they can still provide an entry point for wildfire. Flat skylights contain tempered glass. Domed skylights have a plastic outer shell, usually with an inner layer of flat glass. In domed skylights that can be opened (i.e., they are operable), screening is sometimes used instead of the flat glass layer. If you have an operable skylight, make sure it is closed during a wildfire in order to avoid the entry of burning and glowing embers. None of these configurations could pass a standard Class A fire exposure test used to evaluate roofing materials. To understand the potential vulnerability of your skylights, you should consider the slope of the roof, the location of nearby combustible materials, and the location of accumulated debris on and around the skylights. If your roof has a steep pitch, the skylight would receive more radiant heat from nearby burning vegetation or buildings, and glass may break or plastic deform. As always, it is better to keep debris cleared away from the skylight. Normally debris will not accumulate on the domed skylights, but it can on the flat skylights, particularly on lower sloped roofs. Debris can also accumulate at the edge of skylights. If that debris were to ignite, then the materials and connections at the roof-to-skylight intersection would be vulnerable, so it is important to clear debris on a regular basis. Vegetation management should also be part of your solution. Overhanging tree branches should be removed, since a broken branch could fall and break the skylight.

Roof Edge

The roof edge is vulnerable to wildfire exposures in two ways. The first is when you have a debris-filled rain gutter located adjacent to the roof edge. The second occurs with roofing profiles where the design results in large gaps between the roof covering and the roof sheathing. A common example of this is barrel-design clay tiles. The gaps typically occur at the roof edge, but can also occur at the roof ridge (peak). In both, an ember exposure would be the most important ignition source.

Rain Gutter

When ignited by embers, the burning debris in the gutter will provide a flame contact exposure to the edge of the roof (fig. 7). The protection provided by the roof edge must be sufficient to resist the entry of flames into the attic space or cathedral ceiling. The roof edge must also protect against the ignition of the exposed roof sheathing or the exposed fascia board. The exposure is more severe if metal angle flashing is not used at the roof edge and if the gutter is hung below the roof edge, leaving the roof sheathing exposed.

The most important thing you can do for the gutter is to keep it clear of debris. This debris can be readily ignited by embers during a wildfire. The material that the gutter is made from is less important. A metal (noncombustible) gutter will stay in place while the debris burns and the resulting flames will impinge on the edge of your roof (not your Class A roof covering, but the edge of it).

Figure 7. Note the heavy needle accumulation in this metal gutter. If ignited by embers, flames would impinge on the roof edge, potentially igniting the roof sheathing. Because of the open eave construction (i.e., exposed rafters), the fire would not immediately enter the attic or cathedral ceiling space. If ignited, the wood shingle siding and plywood skirting also shown in this photograph would threaten the home via a flame contact exposure to the single-pane window and the under-eave area. The ignited shingle siding could also burn into the stud cavity and into the living space of the home. *Photo:* Stephen L. Quarles.

The vulnerability of the roof edge will depend on materials used and how well the flashing, if used, protects the edge. On the other hand, a vinyl (plastic) gutter will quickly melt, detach, and fall to the ground (Jennings 2000). The burning debris will fall with it and continue to burn on the ground. Once on the ground, the roof edge is no longer exposed to flames, but combustible siding may be, particularly if the near-home vegetation or ground cover can easily ignite. The problem with gutters is that the debris can accumulate in them. Keep debris out of them, and the problem goes away. Inspection and removal of debris in gutters should be done before fire season and as necessary thereafter. Since debris, just like burning embers, can be blown in from surrounding areas, a good vegetation management (fuel reduction) plan around your property can reduce, though not eliminate, the accumulation of debris in gutters. A pre-evacuation task that would alleviate the problem of some debris accumulation in a gutter would be to plug the down spouts and fill the gutter with water. The downspouts would be uncovered upon returning home.

Given the potential problems with gutters, why not just do away with them? Properly installed and maintained gutters and down spouts play an important moisture-management role for a building by collecting and moving water to where it will not have a negative (moisture-related) impact on the foundation and crawl space. (A properly installed subsurface drainage system, however, could alleviate the need for gutters.)

A number of gutter cover devices are commercially available. These products are intended to limit the accumulation of debris in the gutter and allow for the free flow of water into and out of them. These devices either cover the gutter with a solid material or screen, or fill the gutter with a porous (foam) material. There is variability in the cover devices, including those that 1) incorporate a screen that completely covers the gutter, 2) incorporate a solid, thin metal sheet that covers the gutter but has an opening at the outside edge to allow water to enter, or 3) use a hybrid metal cover/louvered design. The solid, thin metal cover relies on the surface tension of water, releasing from the rounded metal edge of the cover to drop into the gutter. The porous foam devices allow water to enter and flow through the gutter, while excluding debris larger than the pores. A procedure to evaluate the performance of these devices has not been developed, so if you are considering one of them, review the available literature that represent a range of designs and look at devices installed on nearby homes. The devices require maintenance and—with some—there is a tendency for debris to accumulate on the roof behind the device, which you should remove (fig. 8). None of the available devices is likely to be completely maintenance free.

Roof Covering Profile

If not covered or blocked, rounded openings in a tile roof allow for the entry of windblown debris and also make it possible for birds and possibly rodents to enter and build nests under the roof covering. Fine debris and nesting materials are easily ignited by embers, and once ignited, will provide a flame contact exposure to the larger structural wood members under the noncombustible covering. In this case, the fire protection offered by the tile roof covering will be bypassed. Products called *bird stops* are manufactured for

Figure 8. Debris accumulation behind a gutter cover device. The gutter is clear of debris, but the roof still should be cleared of debris. *Photo:* Stephen L. Quarles.

use with these designs. The bird stop can consist of a metal or clay piece attached at the edge of the roof. These members do not necessarily fit tightly enough to stop all embers from entering the space, but they will significantly reduce the accumulation of debris. In addition to the metal or clay pieces, a mortar mix can be used to plug the opening. Openings can also occur in the field of the roof where tiles overlap, and at the ridge along the roof line. Routine inspections should be conducted to assure that the end enclosures are in place (fig. 9). Gaps can also occur at the ridge of the roof, and these should also be plugged. (Typically a mortar mix is easier to use in these locations.)

Vents: Attic and Crawl Space

Postfire investigations of buildings have provided valuable lessons regarding the vulnerability of vents to ember and flame entry. Embers directly entering the attic through vents can ignite fine debris and other combustible materials stored there. As pointed out by Rose (2005), "...hot spaces and hot materials tend to be dry spaces and materials. Attics are strongly affected by sun, so they tend to be dry." Ignition of wood trusses or other structural support members can occur after exposure to the flames from the fine fuels and combustible materials. Embers can also ignite near-home vegetation, which in turn will result in a flame contact exposure to the siding, window, and potentially eave and vents. Although embers can also enter into crawl spaces through vents, this mode of entry has not been considered as important as entry into attics, probably because embers entering a crawl space vent are more likely to land on soil. Nevertheless, there have been reports of ignitions from embers and flame entering into crawl spaces.

Attic and crawl space vents serve important functions in buildings by helping remove moisture that can move into these spaces, either from the soil (in the case of a crawl space) or from the living space (in the case of attics and cathedral ceilings). Two or more vents are used in crawl spaces to allow for cross ventilation, and air inlet and outlet vents are used in attics and cathedral ceilings. Inlet vents are usually in the eave and soffit area. Outlet vents are placed at or near the ridge line of the roof.

The current building code calls for vents to be covered with a noncombustible (metal) wire-mesh screen to prevent small rodents from entering these spaces. The building code now allows ⅛-inch mesh screening for vents, and this size is certainly better from an ember-intrusion perspective than the ¼-inch minimum mesh size that was previously required. However, laboratory studies have shown that embers passing through ⅛-inch screening can still have enough energy to ignite fine fuels (Quarles 2009). Laboratory studies (Manzello et al. 2009) and field observations (Dowling 1984) have also documented ember ignition of structural wood members. Building officials are concerned about using finer mesh screening, such as 1⁄16-inch, because of the ease with which they can become plugged with

Figure 9. Two of the three visible bird stops shown in this clay barrel tile roof covering have been improperly installed or have become detached. Inspection of these should be part of a regular (annual) inspection and repair plan. *Photo:* Stephen L. Quarles.

airborne debris or painted over (fig. 10), thereby compromising the vent's moisture management function; however, somewhat finer mesh screening may eventually be allowed by the building code. Even though finer mesh screening uses wire with a smaller diameter, the total amount of void space (no wire) is reduced when finer mesh screen is used. For example, assume you have a vent opening that is 1 foot on a side (the area would be 1 square foot). Placing ¼-inch, ⅛-inch, and 1⁄16-inch mesh over this opening would reduce the void space by 19 percent, 25 percent, and 29 percent, respectively. With finer mesh screening, a building official may require more vents to obtain the required amount of venting. (For equivalents between U.S. and metric systems of measurement, a conversion table is provided at the end of this publication.)

Figure 10. Paint easily bridged the gaps in this 1⁄16–inch mesh screen, reducing the effectiveness of this vent to allow air flow. Note that the screen has become detached from the substrate on the right-hand side. Embers could easily enter through this gap. *Photo:* Stephen L. Quarles.

Figure 11. Accumulation of pine needles at the entrance to a ridge vent. *Photo:* Stephen L. Quarles.

New vents designed specifically to resist intrusion of embers and flames are commercially available. These vents typically incorporate a finer-mesh secondary screen (i.e., one that is set behind the outer screen) and other design features. Commercial availability of these vents has preceded an accepted procedure to evaluate their performance, but a standard is currently being developed by an American Society for Testing and Materials (ASTM) task group. The California Office of the State Fire Marshal is also evaluating these vents as test reports from accredited fire laboratories are submitted. In lieu of these more elaborate vent devices, and depending on the ease of accessing your vents, homeowners could prepare temporary vent covers and include installation of these covers (e.g., ¼-inch plywood, a thin metal plate, etc.) as part of a pre-evacuation plan. These covers would be removed upon returning home.

One common type of attic vent, the ridge vent (a linear vent that follows the ridge line of the roof), has not been incorporated into much of the vent development and testing. These vents have generally been shown to resist the entry of wind-driven rain and so may also resist the entry of embers. One potential problem with ridge vents, at least in California, is the code requirement that vents and vent materials used in homes located in wildfire-prone areas be protected by noncombustible materials. Many ridge vents incorporate a plastic corrugated material as the air flow media between the attic and exterior. In order to be used in California, these vents will have to incorporate metal screening as the outermost component. A flame contact exposure may be possible in this area if debris accumulates at the entrance to the vent (fig. 11). Metal screening has not been effective in resisting the intrusion of flames (see "Window Screen" section in this publication).

Unvented attics are allowed by building codes in some regions. Because vents are not included

in an unvented attic, it would be an inherently better design strictly from the perspective of wildfire protection. There are two common features in an unvented attic design. The first is the relocation of the thermal barrier (the location of the insulation) from the ceiling between living space and attic to the roof line (i.e., to the underside of the roof sheathing). Usually closed- or open-cell foam insulation is used in unvented attic designs. The second feature is the installation of an air barrier, or the careful sealing of openings, in the ceiling between living space and attic. The purpose of the air barrier is to reduce moisture movement from the living space of the building into the attic space. With an unvented attic design, the attic becomes a conditioned space. Insulation applied to the bottom of the roof sheathing keeps the attic warm, avoiding temperatures that would lead to moisture condensation. An unvented attic is easier to install with new construction, but can be a retrofit option for existing homes. Quality installation is always important, but in the case of retrofitting, it is even more so. Permanently closing off vents without considering potential moisture-related damage issues would not be advisable (Quarles and Tenwolde 2005).

Figure 12. The wide overhang on this home protects the exterior wall from rain. Since many water-related problems in buildings can be traced to leaks at penetrations in the exterior wall (e.g., at windows and doors), limiting exposure would reduce the occurrence of water-related problems. *Photo:* Stephen L. Quarles.

Eaves and Overhangs

The eave and overhang of buildings (whether or not vents are used) can be vulnerable to fire. Windblown embers can congregate in this region of the house, and if near-home vegetation or combustible siding ignites, flames could also reach this area. A wider overhang provides greater protection to the wall from the elements of rain and sun, but it can reportedly also exacerbate wildfire exposure. Wider overhangs have been considered more vulnerable as they trap more heat and embers under the overhanging roof (FEMA 2008), and narrow overhangs have been recommended for enhanced resistance to wildfire. A wide overhang would be more vulnerable when the building is uphill from an approaching wildfire. With this exposure, reducing the width of the overhang improves ignition resistance by providing a reduced area for embers to accumulate under the eave. However, research has shown that when the wildfire is above the eave, the eave can protect (shade) the upper portion of the wall from the radiant heat (Cohen 2004). This presents another example where the siting of the home will help determine the potential wildfire exposure.

Even if vents have been eliminated from the under-eave area, it should provide protection by using appropriate materials. Ignition-resistant materials, or at a minimum those that resist fire penetrating into the soffit, should be used. When considering this option, it is important to take into account the need for wider overhangs in protecting the exterior wall from rain (fig. 12). Most water-related damage in buildings results from leaks, and on exterior walls most of the leaks occur at penetrations in the wall (e.g., at windows and doors). Wider overhangs protect the wall from rainfall (Canada Mortgage and Housing

Corporation 1999). We recommend using ignition-resistant or noncombustible soffit materials and benefitting from the moisture-protection benefits of a wide overhang.

Two basic types of construction exist for the eave. The first is an open eave design where the roof rafters extend beyond the exterior wall and are visible (fig. 13). Blocking is used to fill the space between the top of the exterior wall and the roof sheathing. If present, vent openings would be cut into the blocking. The second is a soffited construction where the eave is enclosed (fig. 14). This type of construction is also called a *boxed-in* eave, although boxed-in is sometimes reserved for situations where an open-eave design is enclosed, following the slope of the exposed rafters. The vulnerability of an unvented open eave or soffited eave construction will depend on the material and joints. Joints that exist between different pieces of building material are particularly vulnerable in combustible soffit material, and they will usually be the location where the fire would enter. For example, the initial failure in a tongue and groove (T&G) soffit material will either be at the T&G joint or at a knot. A knot or internal void in a plywood soffit material would be the likely failure location (Jennings 2000). Joints would also be the most likely failure location in a noncombustible material.

Figure 13. An example of open-eave construction. The roof rafter tails are exposed. The circular frieze-block vents shown here are typically located in the blocking. Note the gaps between the blocking and adjacent framing which would allow ember entry. These gaps could be caulked. Backer rod may be needed for wider gaps. The caulked joints should be inspected annually and failed joints repaired. *Photo:* Stephen L. Quarles.

Figure 14. An example of a soffited eave, also sometimes called a *boxed-in* eave. Depending on the vulnerability of the vent, embers could enter into the soffit area. Vertical flame spread up the wall would make flame entry through the vent and into the attic more likely. Moving the vent away from the wall (closer to the edge of the roof) would make flame and ember entry less likely. *Photo:* Stephen L. Quarles.

Some retrofit guides suggest that soffited (boxed-in) eaves are preferable to an open eave design (Slack 2000; FEMA 2008); however, only anecdotal evidence supports this. The number of blocking-to-rafter tail joints in an open eave design would support the soffited design as the joints could collect debris and embers. Even though these gaps are nominally tight, actual dimensions will vary, as will their propensity to collect debris and embers. Depending on the width of these gaps, caulk could be used to fill the void. If used, the joints should be inspected annually and maintained when the caulk joints have failed.

Venting the soffited eave can be accomplished with *strip vents* that incorporate wire mesh. These vents should be located near the outboard edge of the overhang to minimize ember or flame intrusion (see fig. 14). The soffit space (the enclosed space bounded by the soffit material, the roof sheathing, and the exterior wall) can be open to the attic or separated by a partition. If a partition is present, air must be able to move through open-

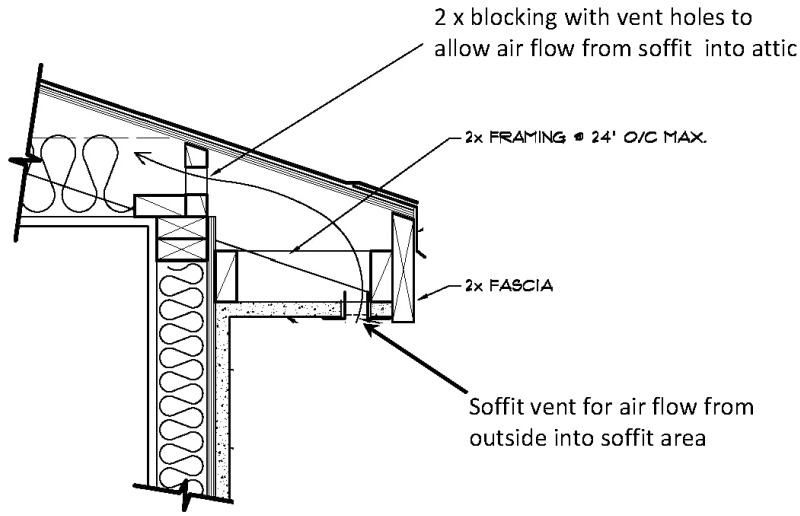

Figure 15. Diagram of construction details that allow air to flow from the soffit into the attic. *Source:* Adapted from *Ignition Resistant Eave Construction Guidance Document,* courtesy of San Diego County Department of Planning and Land Use.

ings in order to provide the circulation necessary to ventilate the attic (fig. 15).The California Building Code restricts the use of some types of vents in the eave area.

Windows

During a wildfire an open window is the most vulnerable to flames or embers. Closed windows fail if the glass breaks or if the frame material ignites and burns through into the home. If the glass breaks, embers can easily enter through the opening and ignite materials in the home. Glass breaks as a result of temperature differences (and resulting stresses) that develop between the glass that you can see (i.e., look through) and the glass that is protected by the framing material when a window is exposed to the heat of a fire. The stresses cause small cracks that occur at the edge of the glass to grow. Since larger pieces of glass (in larger windows) have more edge (and therefore more small cracks), larger windows are more vulnerable than smaller ones.

A discussion of windows is complicated because they can be made from many materials. Different kinds of glass can be used (e.g., annealed, tempered, and laminated), as well as different framing materials (e.g., wood, vinyl, aluminum, vinyl- and aluminum-clad wood, and fiberglass). Depending on the type of window, other components (often combustible) can be used inside the frame (e.g., in the pulley system of a single- or double-hung window) and different materials are also used to hold the glass in the frame. Because the window is set in the wall, its performance can depend on whether or not the siding ignites. As is the case with siding, glass breakage or frame ignition will depend on the severity of the radiant heat level (both the amount and duration) and whether direct flame contact from burning vegetation or other near-home materials occurs.

There has been conflicting information regarding the relative importance of glass versus frame material when windows are subjected to wildfire exposures (fig. 16). For example, some builder's and homeowner's guides (e.g., Slack 2000; FEMA 2008) do not recommend using vinyl- and wood-framed windows. This recommendation, in part, comes from research by Mowrer (1998), where he reported that certain vinyl-framed windows deform under radiant exposures much lower than that required to break the glass. The window fails when the deformed frame allows the glass unit to fall out completely or allows a gap to develop between glass and frame. This problem can occur with windows that have horizontal or vertical separators in the middle of the window (i.e., a single- or double-hung window or a slider window). Research has shown that as long as

Figure 16. The flame contact exposure during laboratory testing of this wood-frame, dual-pane window resulted in glass breakage. The relatively large pieces of glass that remain indicate that annealed glass was used. *Photo:* Stephen L. Quarles.

the horizontal or vertical separator member has an internal reinforcement bar, the deformation will not take place (Quarles and Beall 2001). Vinyl windows that are certified to comply with the AAMA/WDMA/CSA 101/I.S.2/A440 Standard/Specification possess this feature, so look for labeled products indicating this certification. For most vinyl window manufacturers, inclusion of the reinforcement bar has always been standard practice because of the need to meet other performance requirements (e.g., the forced entry requirement and certain structural code resistance requirements such as wind load resistance).

McArthur (1991) tested wood- and aluminum-framed windows and reported that the glass was the most vulnerable component. These results generally agree with unpublished research conducted at the University of California Fire Research Laboratory. In these studies a variety of frame and glass types were studied. During one test the beading material that holds the glass to the frame failed, allowing the glass to fall out prior to breaking, but otherwise these results support the recommendation to use the more resistant tempered glass, and select frame material based on other factors (aesthetics, cost, etc.). Therefore, to improve the performance of their windows under wildfire exposures, homeowners should upgrade to a multipaned unit (two or three panes), using tempered glass (the California building code requires that at least one pane in a multipaned unit be tempered). Tempered glass is about four times stronger, and also much more resistant to thermal exposures, than the normal annealed glass commonly found in most windows.

Research conducted in Australia has shown that a reflective film on the exterior surface of the outside glass provides effective protection against radiant exposures (Bowditch et al. 2006). These coatings are most often used to reduce energy costs of a building and there are a number of commercially available products. If you are considering use of a reflective coating to improve the performance of your windows during a wildfire, consult with an energy professional to evaluate other impacts of the coating. Bowditch et al. (2006) also reported that laminated glass did not perform any better than annealed glass (i.e., the glass typically used in windows).

Low-E coatings have sometimes been discussed as a means of enhancing the wildfire performance of windows. Low-E coatings are always on one of the inner surfaces of a dual-pane unit. Mathematical modeling has predicted that a low-E coating placed on the inner surface of the outside glass would improve the performance of a window exposed to a wildfire (Cuzzillo and Pagni 1998). This has not been confirmed by laboratory testing, but agrees with reports that manufacturers

will place low-E coatings on this surface in order to minimize the potential for thermal stress (Carmody et al. 1996).

Ignition of window curtains from a radiant exposure, prior to glass breakage, is unlikely as long as annealed or tempered glass is used. Babrauskas (2003) summarized research investigating glass breakage and ignition of materials under radiant heat. He reported that glass breakage occurred at radiant exposures between 10 kilowatts per square meter for single-pane annealed glass (approximately 25 kilowatts per square meter for double pane) and 45 kilowatts per square meter for tempered glass. Cotton and polyester materials (which curtains might be made of) were igniting at about 40 kilowatts per square meter, but he also reported that glass reduces the amount of radiation transmission by half. With these types of glass, breakage is far more likely to occur before curtains ignite. It is still a good idea to remove easily ignitable things away from the window in case of glass breakage and ember entry. If you have more expensive types of glass (e.g., ceramic, borosilicate, or dual-pane/intumescent-filled units), then ignition of interior objects would be far more likely because they are much more effective at resisting breakage under elevated radiant heat exposures. However, windows with any of these kinds of glass are very expensive and beyond the budget of most homeowners. (Automatic shutters would be more affordable and would provide comparable protection from radiant exposures.) More importantly, if you expect these kinds of fire exposures, then certain near-home vegetation management projects should be a top priority on your To Do list.

Window Screens

Research has shown that window screens improved the performance of glass exposed to radiant heat (McArthur 1991). Bronze, fiberglass (with polyvinyl chloride coating), and aluminum screens all improved glass performance by increasing the time needed for edge cracks to develop. Results from McArthur's study showed that bronze screens were most effective and aluminum the least effective. Unpublished data from testing conducted at the University of California Fire Research Laboratory showed that screens do not provide any added protection from a flame contact exposure, such as that from burning vegetation located under the window. Window shutters would be effective against both radiant and flame contact exposures.

Windblown embers will still be able to pass through screens. If the glass in the window has failed, and the screening is still in place, the wind blowing against the screen and into the building will result in the ember being reduced in size until it can pass through. Since window screening is usually fine mesh (approximately 1/16-inch opening), embers that pass through will have minimal energy and will not be likely to ignite internal furnishings. If the glass and screening have both failed (i.e., large gaps in both), entering embers will be able to ignite combustible materials in the home.

Decks

The vulnerability of decks to wildfire will depend on the decking board material, any combustible materials stored under the deck or kept on the deck, and the topography and amount and condition of vegetation leading to the deck. Even though noncombustible decking products are available (e.g., metal decking and lightweight concrete), many decking products are combustible. Untreated wood and wood treated with fire retardant, as well as plastic and wood-plastic composite products, are all combustible and therefore vulnerable to ember and other wildfire exposures. However, the deck can be designed to minimize exposure to embers. During fire season an important job will be to keep your deck free of easily ignited materials such as leaves and needles that have accumulated in the gaps between deck boards and at the interface between the deck and the siding of the house. Metal flashing can be applied to the lower 18

inches of the wall to protect combustible siding from the embers that may accumulate during a wildfire. It is important that the metal flashing be tucked in behind the lap-joint where it terminates. Decayed wood (rotted wood) is more readily ignited, so periodically inspect for decayed members and replace them.

In California, deck boards on new homes now must meet a minimum performance requirement (based on energy release when burning) to be used in wildfire-prone areas. Flame spread information is usually also available for decking products. A listing of most of the decking products that comply with the California requirements is maintained in a free online document called the *WUI Product Handbook*, and is maintained on the Office of the State Fire Marshal Web site, (http://www.osfm.fire.ca.gov/strucfireengineer/pdf/bml/wuiproducts.pdf).

Some people are surprised to find that untreated wood decking is included in the *WUI Product Handbook*. The testing conducted on combustible decking products has shown that most products are not highly combustible by themselves. Typically, other fuel sources contribute to larger deck fires (debris or combustible material stored under or on top of the deck, or a deck located on a slope containing a lot of combustible vegetation). The take-home message is to avoid storing other combustible materials on and under your deck. If your home is located on a slope, and your deck is overhanging it, your defensible space should be increased to avoid a flame contact exposure during a wildfire.

Deck Enclosure

Regardless of what type of deck board is used, ignition can occur from an accumulation of combustible material (grass, leaves, needles) under the deck. Embers can readily ignite this debris during a fire. Enclosing the underside of the deck is one method to reduce the risk of ignition. There are two ways to enclose your deck. You can enclose it by applying sheathing or siding around the perimeter (a vertical enclosure), or by attaching sheathing/panel materials to the underside of the structural support members (a horizontal enclosure). The more careful you are about not storing combustible materials near your home (and under your deck), maintaining near-home vegetation, and cleaning up windblown debris, the less important enclosing your deck becomes. The closer the deck is to the ground, the harder it is to use as a storage area, but it also becomes more difficult to clean out debris that will accumulate. If you have a solid surface deck (e.g., one with a lightweight concrete walking surface), it is probably already enclosed horizontally. If you are going to store combustible materials under your deck, then vertically enclosing it with a noncombustible or ignition-resistant material would make sense. If you do this, make sure you avoid any potential moisture-related degradation issues by providing adequate venting or take other moisture control actions. Also, deck enclosure will not guard against embers falling on top of the deck, so be aware of combustible material that you have on your deck. Firewood should be moved off of the deck during wildfire season. Combustible materials commonly found on decks (e.g., brooms, umbrellas, patio furniture, door mats, etc.) should be moved off the deck if possible, or moved as far from the building as possible during wildfires and spaced to avoid clustering items.

Exterior Siding

Siding Material

Siding products can be classified into three basic categories. These include combustible, noncombustible, and something called *ignition resistant*. Although most people would assume that, in terms of fire resistance, an ignition-resistant material would fall somewhere between a noncombustible and combustible material, only the California

Building Code actually defines this term. Materials that are classified as ignition resistant have to pass a standard test. Some products rated as noncombustible have been defined as such in the building code. Other materials can be rated as noncombustible by passing a standard fire test. The most common combustible siding products include solid wood and other composite wood products (plywood, oriented strand board, and other compressed wood fiber products) and siding made from vinyl or other plastics. Wood that has been treated with an exterior fire-retardant chemical, and that has passed a standard flame spread test after undergoing a specified weathering procedure consisting of wetting and drying cycles, is called ignition resistant. Common noncombustible materials include three-coat stucco, metal siding, and fiber cement siding.

Figure 17. This corner section was constructed with a wood-composite siding material (left side) and a noncombustible fiber cement product (right side). The ignition source for both was a burning brand. The wood-composite siding product was ignited by the ignition source, and the fire then spread up the wall. Flames from the fire would have impinged on windows and eave, if they had been present. The wood brand burned out at the base of the fiber cement siding product without causing significant damage. *Photo:* Stephen L. Quarles.

An ignition-resistant material should not be confused with ignition-resistant construction. The latter takes into consideration all components and materials on the outside of the house, as well as the vegetation management plan used in the defensible space zone around the home. In California, combustible materials can be used in ignition-resistant construction.

There are two ways that combustible siding can make your home vulnerable to wildfire. First, the siding can ignite, with flame spreading up the wall, providing a flame contact exposure to other components on the wall, including windows, eave (soffit), and vents (fig. 17). Under this scenario, the combustible siding transfers the problem to these other components. If the windows, eave, and vents do not fail, the home will experience considerable damage but may not be destroyed. Under this scenario, however, total loss of the home is far more likely.

The second way that combustible siding can make your home vulnerable to wildfire is when fire penetrates through the siding (most likely at a horizontal or vertical lap joint between individual pieces of the siding material), into the stud cavity, and then into the living space of the home (fig. 18). Under this scenario, the home will probably be lost, particularly if no one is present to put out the fire. When thinking about all the ways your home is vulnerable to wildfire exposures, a number of other components are more important (your roof, vents, windows, deck, and vegetation), but ultimately your siding can become the weak link. The importance of maintaining near-home vegetation and minimizing near-home storage of combustible materials has already been discussed, but when combustible siding is also used, these items become even more important to manage. Siding

Figure 18. Flame penetration (*burn through*) at the rabbeted bevel lap joint in a solid wood siding product, as viewed from the stud cavity side of the wall. This test was conducted at the UC Fire Research Laboratory. Although a panelized sheathing product is commonly used in construction, it was not used in this test in order to allow viewing of the siding performance. Use of sheathing has been shown to increase the time needed for fire to penetrate into the stud cavity, sometimes to the point of excluding entry altogether. *Photo:* Stephen L. Quarles.

is also an important factor in home-to-home ignition. If another building is adjacent to the house, consider noncombustible siding.

Testing at the University of California Fire Research Laboratory has shown that, when ignited, compressed wood particle or fiber siding products (see fig. 17) and wood shingle siding will result in more rapid vertical flame spread up the wall, and more rapid penetration through the lap joints and into the stud cavity. Similar results have been observed with vinyl siding. In both of these cases, underlying wood or gypsum sheathing would improve the resistance to flame penetration at a lap joint.

Combustible trim is also vulnerable to ember attack and potential flame contact exposure, particularly at internal corners. In these locations the trim can either be applied on top of siding that extends all the way to the corner or adjacent to siding when trim is applied directly to the studs. When applied directly to studs, the trim-to-siding gaps should be protected and maintained. These caulked joints are likely to fail if subjected to flames. Vegetation is commonly planted in these corners, which are also susceptible to accumulating windblown vegetative debris. During wildfires, this area would also be susceptible to the accumulation of windblown embers. Once ignited, the proximity of adjacent trim pieces makes it easier for flames to propagate vertically up the wall. Therefore, internal corners would be a good location for a noncombustible or ignition-resistant material.

Siding Patterns and Assembly

Testing of siding products conducted at the UC Fire Research Laboratory showed that the siding joint is the most vulnerable part of a combustible siding assembly. Flame penetration through the siding occurred more readily at less complicated lap joints. For example, a ship lap or tongue-and-groove lap joint provided greater protection against flame penetration into the stud cavity compared with a plain bevel joint. With sustained flame exposure, even noncombustible siding materials will eventually fail. For example, failure occurred in a noncombustible lap siding product after approximately 22 minutes of a flame contact exposure. Failure in these materials occurred either as a result of increased heat transfer through the material, with subsequent ignition of a stud, or flame penetration at cracks that developed. Use of structural sheathing, located underneath the siding, provides enhanced protection against flame penetration at lap joints. Because of seismic (earthquake) design issues, sheathing is commonly used, particularly in California.

As previously discussed, prolonged exposure from the wildfire itself is unlikely, since the duration of the main flaming front at a given building is relatively short (5 to 10 minutes at the

most), and even combustible siding products can protect against penetration for these time periods. Prolonged radiant or flame contact exposure from abundant near-home vegetation, or other buildings in proximity, could more easily result in joint penetration.

In summary, although siding is an important component in terms of providing protection for the building from the weather, and also in terms of the aesthetics of the building, in most cases it is less important from a wildfire exposure perspective compared with other components and assemblies. With proper selection and maintenance of near-home vegetation, most siding products will be able to resist typical wildfire exposures. However, viewing the side of the building as a system, use of noncombustible or ignition-resistant materials will reduce the potential fire exposure on windows and the eave area of a building.

Fire-Retardant Treatments and Coatings

Exterior rated, fire-retardant-treated (FRT) wood products are pressure-impregnated with chemicals that improve the fire performance characteristics. These wood products undergo a processing step whereby these chemicals are fixed or otherwise contained to prevent or minimize leaching of the chemical. The process is similar to that used in preservative-treated lumber, which contains chemicals to resist attack from fungi and other wood-destroying organisms. In order to qualify as an exterior-use product, the treated wood must undergo accelerated or natural weathering cycles and pass subsequent fire tests to provide evidence of a prescribed level of performance over the intended service life of the product. There are practical and scientific reasons why a natural weathering cycle equivalent to the intended service life is not required prior to the product being accepted for use.

Instead of leaching losses from wetting, the more likely reduction in performance will be from in-service weathering (i.e., weathering resulting in the loss of wood fibers from the surface, thereby depleting the fire-retardant chemicals). Weathering will be variable, depending on exposure (i.e., the north, east, south, and west sides of your home), but it has been shown to be a slow process. The weathering process can be reduced considerably with a periodic application of a penetrating stain or a film-forming coating.

Stains and coatings are used for aesthetic reasons, and also to improve the resistance to certain exposures (e.g., weathering, fungi, and insects). Film-forming intumescent paints and penetrating stains, applied in the field, have not been shown to provide long-term, improved protection from fire exposures. None of these products have demonstrated long-term, fire-resistance performance in an exterior environment. Until these products can show adequate performance after a defined weathering procedure, they should not be relied on to improve the fire performance of exterior-use building materials.

A gel coating is a new fire protection alternative that is becoming more available to the homeowner. Gel coatings can be effective, assuming they are applied correctly and address points of fire entry as discussed in this publication. Gel coatings are purchased in a concentrate form, and can be applied to the home using a garden hose and an attachment that is supplied by the gel supplier. These coatings lose effectiveness with time (in the order of hours) as a result of water evaporation, but there is no data that evaluates the rate at which this reduction in effectiveness occurs. We do not think it is warranted to rely on a coating in lieu of managing vegetation or improving building materials or design.

Summary

A wildfire-safe home (fig. 19) must be an ember-ignition-resistant home, so that even if the flames do not reach your home, it will be able to withstand the exposure to embers that may have been blown a mile or more in front of a wildfire. To provide maximum wildfire protection for your home, a combination of near-home vegetation management, appropriate building materials, and related design features must be used. These points are summarized in table 1. Preparing and maintaining adequate defensible space will guard against flame contact and radiant exposures from nearby vegetation—but because of the likely ember exposure to your home during a wildfire, you cannot ignore building material and design considerations. Similarly, if you ignore your defensible space (i.e., you do not have it or do not maintain it), the wildfire will produce maximum ember, flame, and radiant exposures to your home. It is very unlikely that even hardened buildings can survive such exposure, as a weak link will likely exist somewhere in the building enclosure.

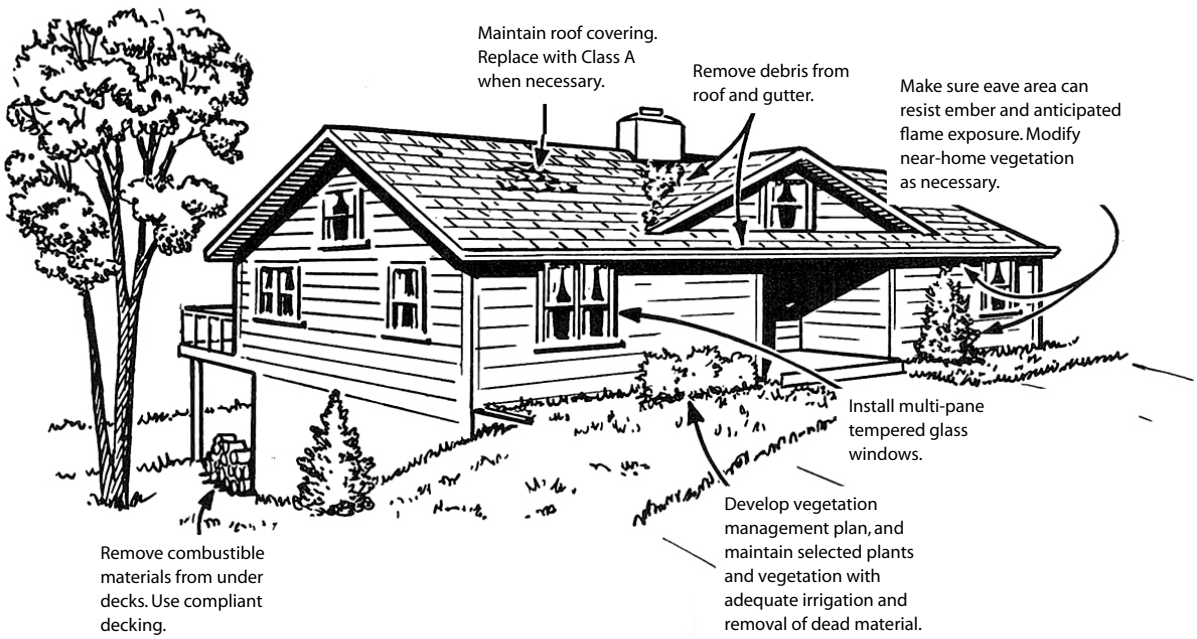

Figure 19. Important guidelines for creating and maintaining a home and landscape that can survive a wildfire threat. *Source:* Stephen L. Quarles.

MEASUREMENT CONVERSION TABLE

U.S. Customary	Conversion factor for U.S. Customary to metric	Conversion factor for metric to U.S. Customary	Metric
inch (in)	2.54	0.394	centimeter (cm)
foot (ft)	0.3048	3.28	meter (m)
Btu	1.135653×10^4		kw/m^2

Table 1. A summary of important building material and design features for houses located in wildfire-prone areas

Component		Main points
Main	**Sub-component**	
roof	-----	Use materials with a Class A fire rating. Follow installation instructions to assure performance as designed and tested. Roof edge and complex roof issues are essential components to a fire-safe roof covering.
roof edge	gutter	If debris is allowed to accumulate in the gutter—and if it is ignited by embers—the flames will impinge on components at the edge of the roof. Clean vegetative debris from gutter on a regular basis. Some gutter cover devices result in the accumulation of debris behind the device. Consider plugging down-spouts and filling gutter with water as one of your pre-evacuation preparation measures.
	openings in roof covering	Plug gaps that occur between roof covering and roof sheathing, which can occur at the roof edge (for example, with a barrel-style roof) or at the ridge.
	complex roof	Make sure to clear needles and other combustible debris from areas where the roof intersects with walls (such as at a dormer) or other roof sections (such as at a valley).
vents	-----	Attic and crawl space vents are susceptible to the entry of small embers. These embers can ignite fine fuels that have accumulated in these areas. At a minimum, replace ¼" mesh screen with ⅛" mesh.
	-----	Consider making vent covers that can be installed prior to the approach of a wildfire (and removed after the wildfire threat has passed).
defensible space (vegetation management)		Reduce vegetation and accumulation of debris and other combustible materials near your home, including under your deck.
		Develop a fire-safe vegetation-management plan for your property.
decks		Decks are vulnerable to an under-deck surface fire or direct ember exposure from above. If ignited, the deck will provide a longer flaming exposure to the side of your house and potentially your eaves.
		Avoid storing combustible materials under your deck.
		At a minimum, use deck boards that comply with the provisions of the California Building Code. Noncombustible and ignition-resistant materials are available for use.
windows	-----	An open window is the most vulnerable window during a wildfire. Window shutters or other pre-made window covers provide additional protection for the window.
	glass	The glass is the most vulnerable part of your window. Multi-pane tempered glass windows will provide the most protection for a reasonable cost. Special fire-rated glass is also available, but it is much more expensive than tempered glass. Maintaining adequate defensible space, and potentially using shutters or covers, will provide similar protection at lower cost.
		Window screens can help protect the glass from radiant exposures.
	frame	In a well-maintained window, the framing material can be selected on the basis of aesthetics, cost, or other criteria determined by the homeowner. The vertical or horizontal separator members in hung or slider vinyl windows should include an internal reinforcement member.
eave	-----	Depending on the siting of the home on the parcel, as well as the combustibility of siding and decking, the eave can be vulnerable to ember and flame exposures.
	-----	If you have an open-eave construction, inspect blocking-rafter tail joints for openings. Seal or box in openings with noncombustible or ignition-resistant material. If you box in, be sure to add appropriate venting. Install vents towards the edge of the roof line, using no larger than 1/8" mesh screen.
	-----	Depending on the siting of the home on your parcel, a wide overhang could result in a greater wildfire exposure (e.g., if your home is located midslope, a wildfire burning up the slope might cause a more severe ember and flame exposure to the underside of your eave). We still recommend having a wide overhang, which adds protection from rain and sun exposures and makes your home more resistant to wildfire exposures through use of more durable materials (i.e., noncombustible or ignition resistant).
siding	-----	The type of siding is less important than other factors in your home design and construction. The key is to reduce the likelihood of prolonged exposure of the siding to flames, regardless of source (i.e., nearby vegetation or another burning building). Reduce the amount of combustible materials near your home.
	-----	If ignited, combustible siding can result in flaming exposure to other components, such as windows and eave and vents.
	-----	When using combustible siding, the more complicated lap joint designs (such as tongue-and-groove and ship lap) provide more protection against flame penetration at lap joints. Although joints are normally viewed as being vulnerable, in this case you are looking for a joint that increases the difficulty for fire to move from the outside to the inside of your home—so "complicated" is good. Underlying sheathing will also improve the resistance of a siding product to penetration from flames.

Important Terms

embers (firebrands). Burning (or glowing) particles of vegetation from tree branches, parts of shrubs or chaparral, or other combustible materials (e.g., construction materials) that ignite and burn during a wildfire and are carried in wind currents to locations in front of the wildfire.

near-home. Typically defined as the area within 5 feet of your home.

ignition resistant. The California Building Code defines *ignition resistant* in a specific way that is based on meeting a minimum flame-spread rating after the material has been subjected to a specified weathering procedure. So, technically, a material that calls itself ignition resistant has passed this test. The definition of ignition resistant used in the California Building Code is based on the International Code Council requirement for exterior fire-retardant wood (lumber and plywood). Therefore, an example of an ignition-resistant material is lumber that has been pressure impregnated with an exterior-rated, fire-retardant formulation.

impingement. This occurs when flames from a fire touch an object (e.g., a plant, a deck, or building).

intumescent. Referring to a coating or other substance that swells when exposed to elevated heat or flames. When a material intumesces, its volume increases and its density decreases.

noncombustible. Incapable of igniting and burning. A standard test procedure (ASTM E-136) can be used to determine if a material qualifies as noncombustible—and if in doubt, you can look to see if this standard is referenced.

radiant energy (radiant exposure). Heat from a fire that is transferred through the air to the object. Radiant energy is that which is felt when standing in front of a camp fire or a fire in a fire place.

Useful Web Sites

University of California:

Center for Fire Research and Outreach
http://firecenter.berkeley.edu/

Homeowner's Wildlife Mitigation Guide
http://groups.ucanr.org/HWMG/

Wildfire Zone
http://www.wildfirezone.org/

Safe Landscapes
http://ucanr.org/safelandscapes

Cooperative Extension's Contra Costa County Web site
http://cecontracosta.ucdavis.edu/Wood%5FDurability/Durability_-_Moisture_Issues.htm
(For a review of siding patterns, see Chapter 6 of *Wood: Detailing for Performance*.)

California Office of the State Fire Marshal:

California Department of Forestry and Fire Protection
http://www.fire.ca.gov/fire_prevention/fire_prevention_wildland.php

CAL FIRE:

"Why 100 Feet?"
http://www.fire.ca.gov/communications/downloads/fact_sheets/2007DefSpaceBrochure.pdf

General Guidelines for Creating Defensible Space
http://www.fire.ca.gov/cdfbofdb/PDFS/4291finalguidelines2_23_06.pdf

University of Nevada Cooperative Extension:

Living with Fire Web

http://www.livingwithfire.info/

Living with Fire in the Lake Tahoe Basin

http://www.livingwithfire.info/tahoe/

eXtension:

eXtension Wildfire Information Network (eWIN)

www.extension.org/surviving_wildfire

References

American Society of Testing and Materials. 2007. Standard test methods for fire tests of roof coverings. Designation E 108–07a, vol. 04.07. West Conshohocken, PA.

Babrauskas, V. 2003. Ignition handbook. Issaquah, WA: Fire Science Publishers.

Bowditch, P. A., A. J. Sargeant, J. E. Leonard, and L. Macindoe. 2006. Window and glazing exposure to laboratory-simulated bushfires. Report to Bushfire CRC, Confidential CMIT Document 2006–205. East Melbourne, Victoria, Australia: Bushfire Cooperative Research Centre.

Butler, B. W., J. Cohen, D. J. Latham, R. D. Schuette, P. Spoko, K. S. Shannon, D. Jimenez, and L. S. Bradshaw. Canadian Journal of Forest Research 34:1577–1587.

Canada Housing and Mortgage Corporation. 1999. Wood-frame envelopes in coastal climate of British Columbia. Ottawa, Ontario, Canada: Canada Housing and Mortgage Corporation.

Carmody, J., S. Selkowitz, and L. Heschong. 1996. Residential windows: A guide to new technologies and energy performance. New York, NY: W.W. Norton & Company.

Cohen, J. D. 2004. Relating flame radiation to home ignition using modeling and experimental crown fires. Canadian Journal of Forest Research 34:1616–1626.

Cohen, J. D., and R. D. Stratton. 2008. Home destruction examination–Grass Valley fire. USDA Forest Service Report R5-TP-026b.

Cuzzillo, B. R. and P. J. Pagni. 1998. Thermal breakage of double-pane glazing by fire. Journal of Fire Protection Engineering, 9(1):1-11.

Dowling, V. O. 1994. Ignition of timber bridges in bushfires. Fire Safety Journal 22:145–168.

Federal Emergency Management Agency. 2008. Home builder's guide to construction wildfire zones. Technical Fact Sheet Series, FEMA P-737. Washington, D.C.: Federal Emergency Management Agency.

Institute for Business and Home Safety. 2008. Mega fires: The case for mitigation. Tampa, FL: The Institute for Business and Home Safety. Disaster Safety.org Web site, http://www.disastersafety.org/megafire.

Jennings, C. M. 2000. Development of protocols for testing the exterior components and assemblies of residential structures under simulated wildfire conditions. MS Thesis, University of California, Berkeley.

Manzello, S. L., Y. Hayashi, T. Yoneki, and Y. Yamamoto. 2009. Firebrand attack on ceramic tile roofing assemblies. In Proceedings, 2009 Fire and Materials Conference. London: Interscience Communications Limited.

Maranghides, A., and W. Mell. 2009. A case study of a community affected by the Witch and Guejito Fires. NIST Technical Note 1635. Gaithersburg, MD.: National Institute of Standards and Technology

McArthur, N. A. 1991. The performance of aluminum building products in bushfires. Fire and Materials 15:117-125.

Mowrer, F. W. 1998. Window breakage induced by exterior fires. NIST-GCR-98-751. Gaithersburg, MD: National Institute of Standards and Technology.

Quarles, S. L., and F. C. Beall. 2001. Testing protocols and fire tests in support of the performance-based codes. In Proceedings of the California's 2001 Wildfire Conference: 10 Years After the 1991 East Bay Hills Fire, 10–12 October, Oakland, CA. Eds., K. S. Blonski, M. E. Morales, and T. J. Morales. Richmond, CA: University of California Forest Products Laboratory. 64–73.

Quarles, S. L., and A. Tenwolde. 2004. Attic and crawlspace ventilation: Implications for homes located in the urban-wildland interface. In Proceedings, 2004 Woodframe Housing Durability and Disaster Issues Conference 4–6 October, Las Vegas, NV. Madison, WI: Forest Products Society. 227–232.

Quarles, S. L. 2009. Unpublished laboratory tests in support of development of ASTM draft standard on vents, ASTM Task Group E05.14.06.

Ramsay, G. C., N. A. McArthur, and V. P. Dowling. 1987. Preliminary results from an examination of house survival in the 16 February 1983 bushfires in Australia. Fire and Materials 11:49–51.

Ramsay, C., and L. Rudolph. 2003. Landscape and building design for bushfire areas. Collingwood, Victoria, Australia: CSIRO Publishing.

Rose, W. B. 2005. Water in buildings: An architect's guide to moisture and mold. Hoboken, NJ: Wiley.

San Diego County, Department of Planning and Land Use. Ignition resistant eave construction guidance document. County of San Diego Web site, http://www.sdcounty.ca.gov/dplu/bldgforms/eaveindex.html.

Sherwood, G. E., and R. C. Stroh. 1989. Wood-frame house construction. USDA Forest Service Agriculture Handbook 73. Washington, D.C.: U.S. Government Printing Office.

Slack, P. 2000. Firewise construction: Design and materials. Colorado State Forest Service Web site, http://csfs.colostate.edu/pdfs/construction_booklet.pdf.

For Further Information

To order or obtain ANR publications and other products, visit the ANR Communication Services online catalog at http://anrcatalog.ucdavis.edu or phone 1-800-994-8849. You can also place orders by mail or FAX, or request a printed catalog of our products from

University of California
Agriculture and Natural Resources
Communication Services
1301 S. 46th Street
Building 478 - MC 3580
Richmond, CA 94804-4600
Telephone 1-800-994-8849
510-642-2431
FAX 510-643-5470
E-mail: danrcs@ucdavis.edu

©2010 The Regents of the University of California
Agriculture and Natural Resources
All rights reserved.

No part of this publication may be reproduced, stored in a retrieval system, or transmitted, in any form or by any means, electronic, mechanical, photocopying, recording, or otherwise, without the written permission of the publisher and the authors.

Publication 8393
ISBN-13: 978-1-60107-693-9

The University of California prohibits discrimination or harassment of any person on the basis of race, color, national origin, religion, sex, gender identity, pregnancy (including childbirth, and medical conditions related to pregnancy or childbirth), physical or mental disability, medical condition (cancer-related or genetic characteristics), ancestry, marital status, age, sexual orientation, citizenship, or service in the uniformed services (as defined by the Uniformed Services Employment and Reemployment Rights Act of 1994: service in the uniformed services includes membership, application for membership, performance of service, application for service, or obligation for service in the uniformed services) in any of its programs or activities.

University policy also prohibits reprisal or retaliation against any person in any of its programs or activities for making a complaint of discrimination or sexual harassment or for using or participating in the investigation or resolution process of any such complaint.

University policy is intended to be consistent with the provisions of applicable State and Federal laws.

Inquiries regarding the University's nondiscrimination policies may be directed to the Affirmative Action/Equal Opportunity Director, University of California, Agriculture and Natural Resources, 1111 Franklin Street, 6th Floor, Oakland, CA 94607, (510) 987-0096. For information about ordering this publication, telephone 1-800-994-8849. For assistance in downloading this publication, telephone 530-754-3927.

An electronic copy of this publication can be found at the ANR Communication Services catalog Web site, http://anrcatalog.ucdavis.edu.

UC PEER REVIEWED This publication has been anonymously peer reviewed for technical accuracy by University of California scientists and other qualified professionals.

web-pr-5/10-LR/RW